LED-CONVERTER UNIT

PS-LD1601-x(S) (22W) (PRELIMINARY INFORMATION)

DESCRIPTION :
This low profile LED-Converter is developed for max. 16 LED-lines
Optimized for **Sharp: LQ190E1LW52**

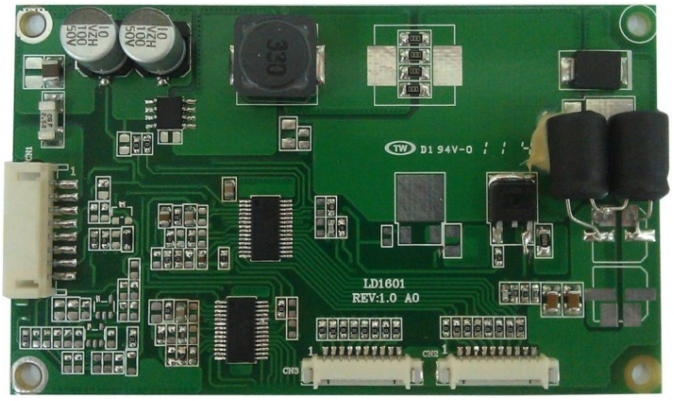

APPLICABLE:

1~16 LED lines (Serial Mode)
LED Voltage max. 23.8V
Lamp Current typ. 85mAdc per line

FEATURES :

Internal Open LED Detection for every Line
1000:1 dimming ratio with external PWM
Remote ON / OFF
Optional: Vst signal for LED failure
RoHS compliant (S)

TEMPERATURE & HUMIDITY :

Operating Temperature Range -20°C ~ +65°C
Storage Temperature Range -20°C ~ +85°C
Humidity 95 %RH max

DIMENSIONS : L x W x H 100 x 60 x 15.6 mm

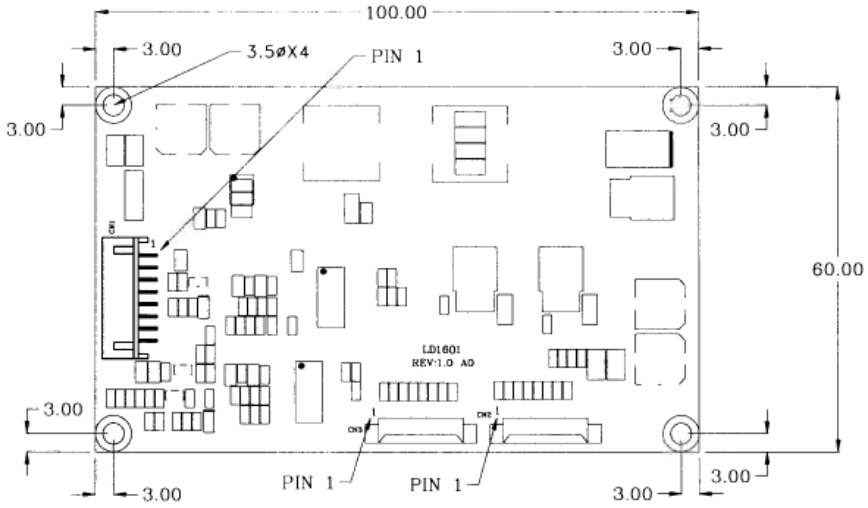

Weight : (g) typ.

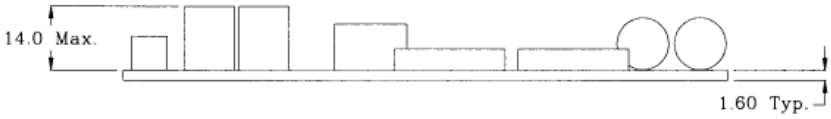

Components

No.	Part Description	Qty.	Material	Note
1	PCB	1	UL94V-0 (FR-4 or CEM-3)	t=1.0mm
2	Connector CN1	1	S8B-PH-SM3	JST or equal
3	Connector CN2 + CN3	2	53261-1090	Molex or equal

Power Systems – The Power Solution

Web: www.Power-Systems.de
Email: Info@Power-Systems.de

Address: Hauptstr. 48 ; 74360 Ilsfeld-Auenstein / Germany
Tel. : + 49 / 70 62 / 67 59 - 6
Fax: + 49 / 70 62 / 67 59 - 800

PS-LD1601-x(S) (22W) (PRELIMINARY INFORMATION)

Input side CN1

Pin No.	Symbols	Ratings
CN 1-1	Vin	10.8 ~ 13.2 Vdc
CN 1-2	Vin	10.8 ~ 13.2 Vdc
CN 1-3	GND	-
CN 1-4	GND	-
CN 1-5	GND	-
CN 1-6	F.F.	Fault Flag (Note 4)
CN 1-7	Vrmt	0~0.8Vdc = OFF / 2.5~Vin = ON
CN 1-8	Ext. PWM	0~0.5Vdc = LOW / 2.5~5.0Vdc = HIGH

Output side CN2+CN3:

Pin No.	Symbols	Ratings
CN2/3-1	RTN1 (-)	LED LINE 1 RETURN
CN2/3-2	RTN2 (-)	LED LINE 2 RETURN
CN2/3-3	RTN3 (-)	LED LINE 3 RETURN
CN2/3-4	RTN4 (-)	LED LINE 4 RETURN
CN2/3-5	RTN5 (-)	LED LINE 5 RETURN
CN2/3-6	RTN6 (-)	LED LINE 6 RETURN
CN2/3-7	RTN7 (-)	LED LINE 7 RETURN
CN2/3-8	RTN8 (-)	LED LINE 8 RETURN
CN2/3-9	Vhigh (+)	max. 23.8Vdc
CN2/3-10	Vhigh (+)	max. 23.8Vdc

ELECTRICAL CHARACTERISTICS :

Parameters	Symbols	Conditions			Specification			Unit	Note
		Vin (V)	Vbr (V)	Tu (°C)	Min.	Typ.	Max.		
Output Current	Iout	10.8 ~ 13.2	0	-20~+65	81	85	89	mAdc	Duty 100% max current
Output Current	Imin	10.8 ~ 13.2	5	-20~+65	-	10	-	%	High activ
Input Current	Iin	10.8 ~ 13.2	0	-20~+65	-	1.7	2.1	Adc	
Open Load	Vbias	10.8 ~ 13.2	0	-20~+65	28	32	36	Vdc	
PWM Frequency	f(PWM)	10.8 ~ 13.2	0	-20~+65	150	-	300	Hz	

Note 1 : External PWM-signal is High active.
Note 3 : Output voltage must always be 3.0Vdc higher than input voltage
Note 4 : When open/short circuit occurs CN1-6 is connected to GND
Note 5 : In case of not needing to connect all outputs please ask factory which pins to connect according to your needs.
Note 6 : The “Fault Flag“ is activated only when all the outputs are connected

CABLES :

for input: 500 mm, stripped and tinned ends, order key <input cable #12>
for output: 500 mm, stripped and tinned ends, order key <input cable #6>
for output: For using LQ190E1LW52 use 2x 300mm length, order key <adapter cable 21>

ORDER KEY :

Model	Function of dimming	Level
PS-LD1601-01	Dimming external PWM-signal (70Khz)	
PS-LD1601-02	Analog dimming (0~5Vdc)	0Vdc max. brightness

Web: www.Power-Systems.de
Email: Info@Power-Systems.de
Address: Hauptstr. 48 ; 74360 Ilsfeld-Auenstein / Germany
Tel. : + 49 / 70 62 / 67 59 - 6
Fax: + 49 / 70 62 / 67 59 - 800
All specifications are subject to change without notice.

TEST CIRCUIT FOR PWM SIGNAL CONTROL :

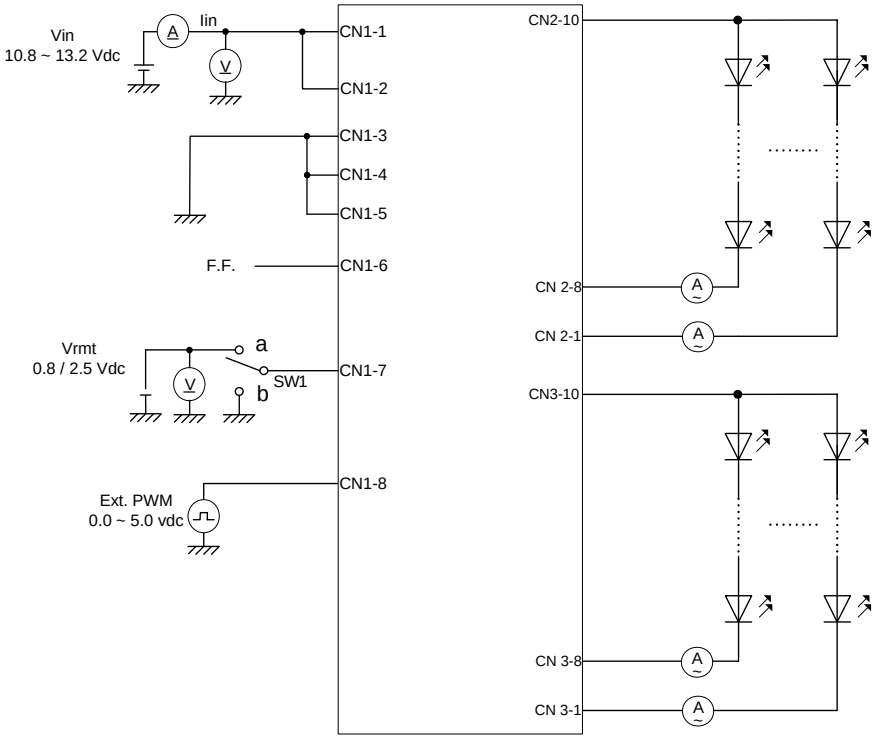

TEST CIRCUIT FOR VOLTAGE SOURCE CONTROL :

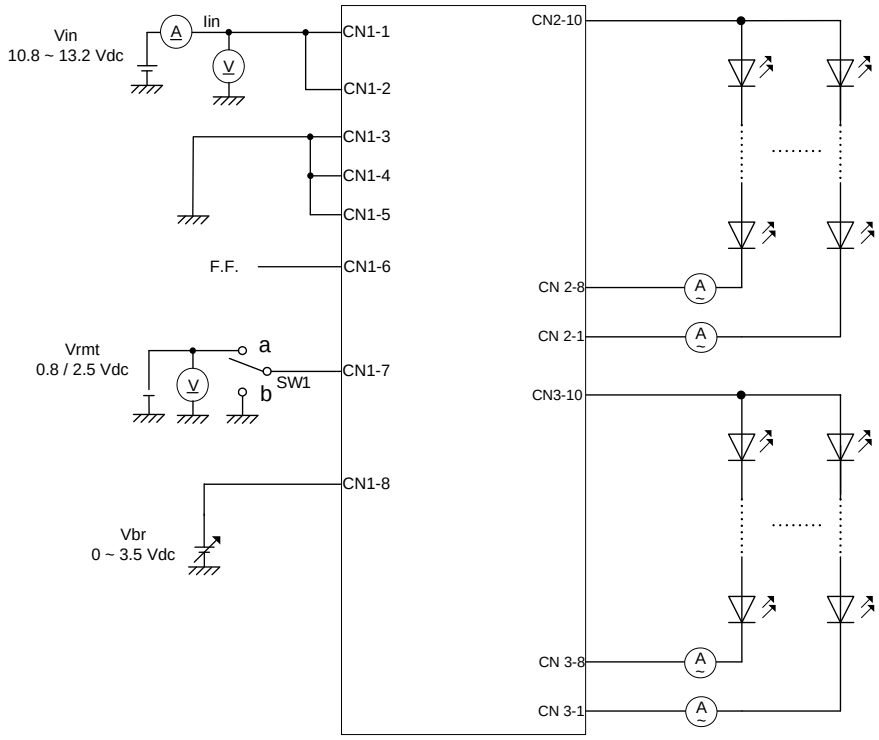

Web: www.Power-Systems.de
Email: Info@Power-Systems.de
Address: Hauptstr. 48 ; 74360 Ilsfeld-Auenstein / Germany
Tel. : + 49 / 70 62 / 67 59 - 6
Fax: + 49 / 70 62 / 67 59 - 800