Power Systems

DC-AC INVERTER UNIT

PS-DA0253-252-B(S) (9 W DUAL OUTPUTS) (PRELIMINARY INFORMATION)

DESCRIPTION :
This DC to AC Inverter was developed for many other low LCD Backlight power supply as low profile applications.
Optimized for Sharp: LQ121K1LG11

APPLICABLE LCD:

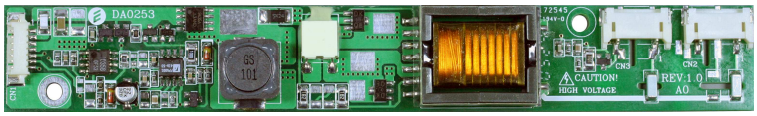

10 to 15 inches dual lamp type
Lamp Voltage 515 Vrms
Lamp Current 2 x 6.5 mArms
Lamp Start Up Voltage 1.700 Vrms (Vin : 12 Vdc)

FEATURES :
Current Feedback Circuit
High Efficiency
Low noise with voltage resonant circuit
Regulated output current
RoHS compliant (S)

TEMPERATURE & HUMIDITY :

Operating Temperature Range	-30°C ~ +80°C
Storage Temperature Range	-30°C ~ +85°C
Humidity	95 %RH max

DIMENSIONS : L x B x H 153 x 22 x 10 mm

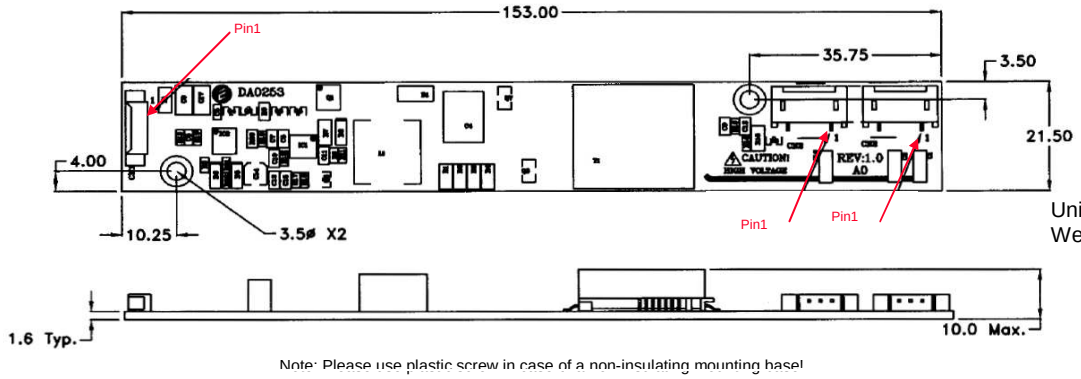

Unit : mm
Weight :40 (g) typ.

Note: Please use plastic screw in case of a non-insulating mounting base!

Components

No.	Part Description	Qty.	Material	Note
1	PCB	1	UL94V-0 (FR-4 or CEM-3)	t=1.6mm
2	Connector CN1	1	53261-0790	Molex or equal
3	Connector CN2 ~ CN3	2	SM02(8.0)B-BHS-1-TB	JST or equal

Input side CN1:

Pin No.	Symbols	Ratings
CN 1-1+2	Vin	10.8 ~ 13.2 Vdc
CN 1-3+4	GND	
CN 1-5	Vrmt	0 ~ 0.4 = OFF / 2.5 ~ Vin = ON
CN 1-6	Vbr	0 ~ 1.8 Vdc
CN 1-7	Rbr	0 ~ 10kOhm

Output side CN2 ~ CN3

Pin No.	Symbols	Ratings
CN 2-1	Vhigh	515 Vrms (6.5 mArms)
CN 2-2	N.C.	-
CN 2-3	Vlow	(GND)

Power Systems – The Power Solution
Web: www.Power-Systems.de
Email: Info@Power-Systems.de
Address: Hauptstr. 48 ; 74360 Ilsfeld-Auenstein / Germany
Tel. : + 49 / 70 62 / 67 59 - 6
Fax: + 49 / 70 62 / 67 59 - 800

DC-AC INVERTER UNIT

PS-DA0253-252-B(S) (9 W DUAL OUTPUTS) (PRELIMINARY INFORMATION)

ELECTRICAL CHARACTERISTICS :

Parameters	Symbols	Conditions			Specification			Unit	Note
		Vin (V)	Vbr (V)	Tu (℃)	Min.	Typ.	Max.		
Output Current	Iout	12±1.2	0.0	-30 ~ +80	6.0	6.5	7.0	mArms	Duty 100%
Output Current	Iout	12±0.6	1.8	-30 ~ +80	1.3	2.0	2.7	mArms	
Input Current	Iin	12±1.2	0.0	-30 ~ +80	-	0.75	1.0	Adc	
Frequency	F	12±1.2	0.0	-30 ~ +80	32.5	40	47.5	kHz	
Open Circuit Voltage	Vopen	11.4	0.0	-30 ~ +80	1.500	1.700	1.900	Vrms	
No Load Shutdown	Tsd	12±1.2	0.0	-30 ~ +80	1.0	-	-	sec	without load

Note 1 : Please keep minimum of 2mm clearance (all directions) between inverter high voltage area as marked on mechanical drawing and any conductors.

Note 2: Other dimming voltage (like 0 ~ 3 Vdc) are available. Please request factory.

DIMMING CHARACTERISTICS (Reference)

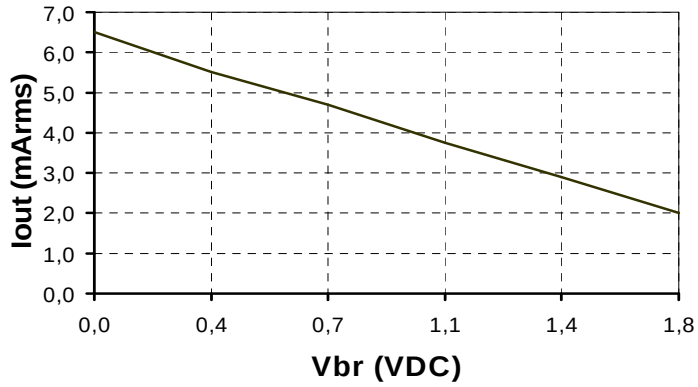

TEST CIRCUIT :

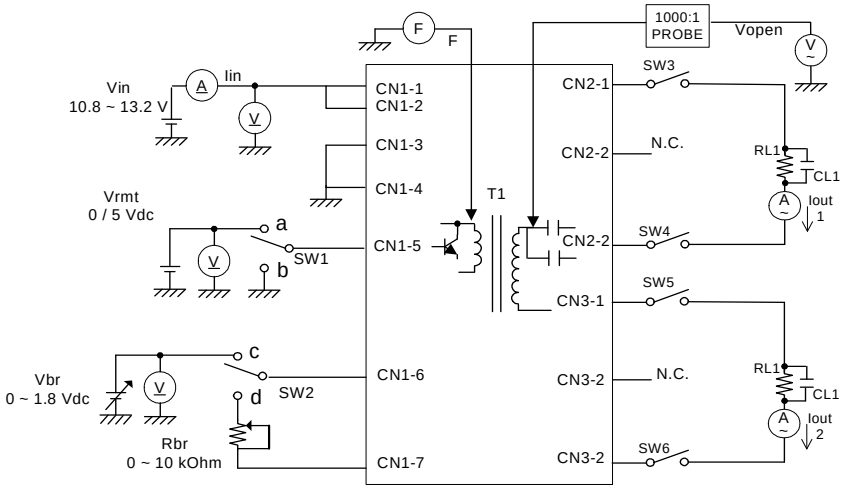

SW1	Operation of unit
a	Operation
b	Non operation

SW2	Operation of unit
c	Vbr 0 ~ 1.8 Vdc dimming
d	Rbr 0 ~ 10 kOhm dimming

Web: www.Power-Systems.de
Email: Info@Power-Systems.de
Address: Hauptstr. 48 ; 74360 Ilsfeld-Auenstein / Germany
Tel. : + 49 / 70 62 / 67 59 - 6
Fax: + 49 / 70 62 / 67 59 - 800